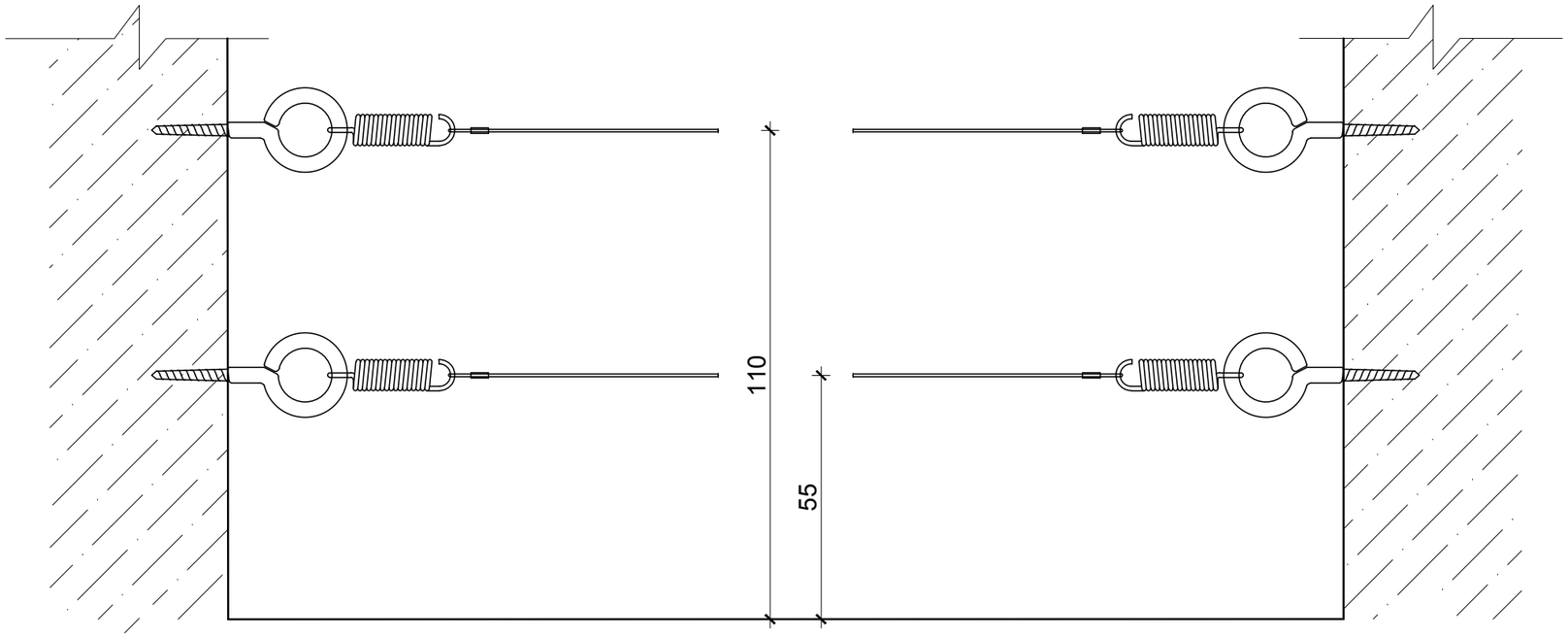

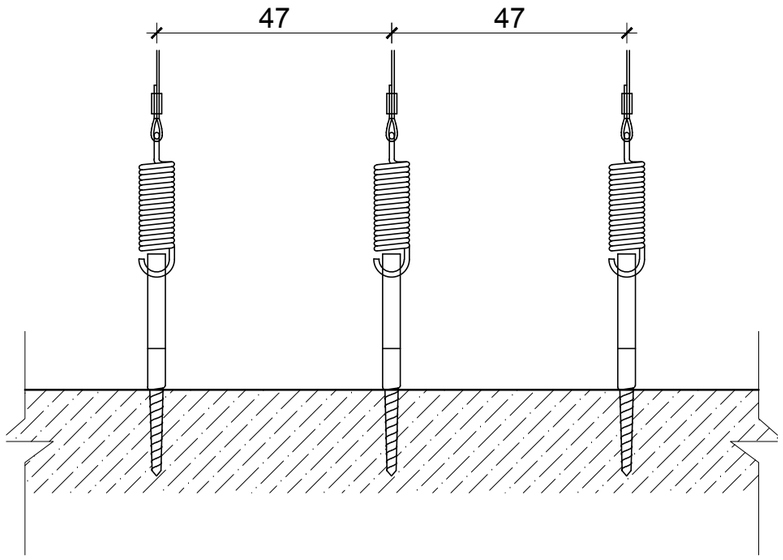

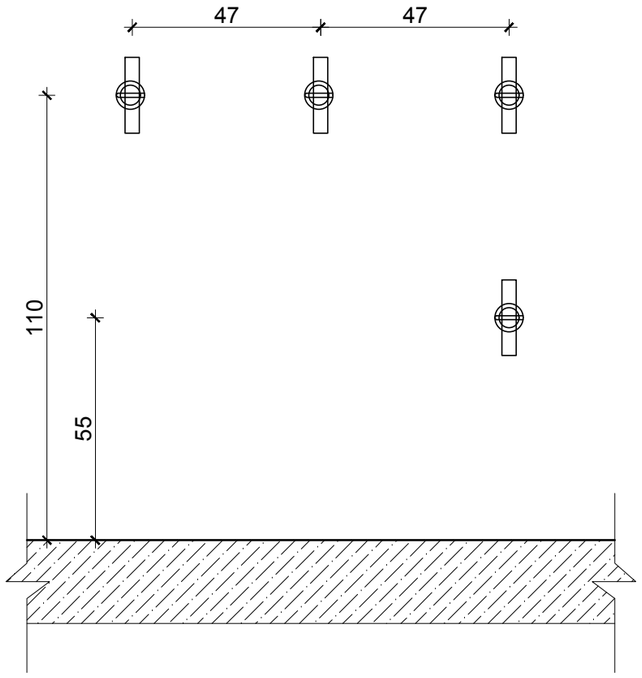

	Accessories	Article-No :
1	Stainless Steel Wire	D-0601
2	Tension Spring, stainless steel	D-07
3	Eye Screw	D-0803
4	Wire connectors	N-2405

Name	Stainless Steel Eyebolts
Function	Pigeons are dispersed from protected areas with thin, horizontally taught stainless steel wires. Experience shows that pigeons cannot rest on these wires.
Components	Stainless steel pints on pipe, Wires, tension spring, wire connectors, screws, other materials for installation (screw anchors, nails)
Material	Stainless Steel 1.4301
Distance between wires	<50mm
Number of wires	1/2/3/4 up to client
Installation	Stainless steel pins are attached to the underground (aluminium ledges, attics etc.) with appropriate installation materials. Stainless steel wires are attached to the pins and taught using tension springs.

Liability advise

TONI-Products are long established and proven bird control products. However, TONI products can only work effectively as part of an overall and planned programme of bird control. This includes hygiene management and the use of professionally trained personnel. Without limitation, TONI Bird Control Solutions GmbH & Co. KG will not accept liability for any consequences as a result of poor equipment maintenance, misuse, inappropriate use, lack of operative training, failure of due diligence or through lack of prior project consultation. In some countries, the use of TONI products may require an official permit for building regulation or nature conservation. TONI will not accept liability for any consequences as a result of missing approvals.

TONI Bird Control Solutions GmbH & Co. KG
Spezialist für Vogelabwehr
Offenbacher Landstrasse 74
60599 Frankfurt / Germany
Tel. +49(0)69 4800 9779
Fax. +49(0)69 4800 9778
www.Birdcontrolsolutions.net

Manufacturer: TONI Bird Control Solutions GmbH & Co. KG

Product name:			Drawing Scale :
Stainless Steel Eyebolts			1:1
	Name	Date	Product-No:
Done by	S.FERENIDIS	25.01.2016	D-08